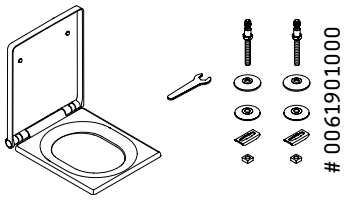


#002111..00, #002119..00,
#002121..00, #002129..00,
#002201..00, #002209..00

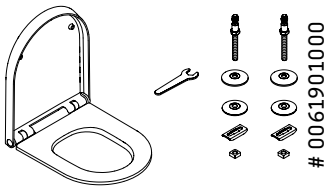


#002709..00

1

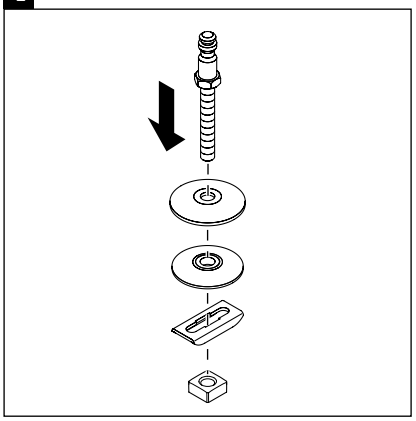

2

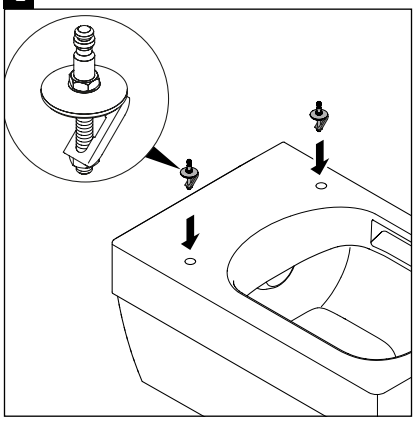

3

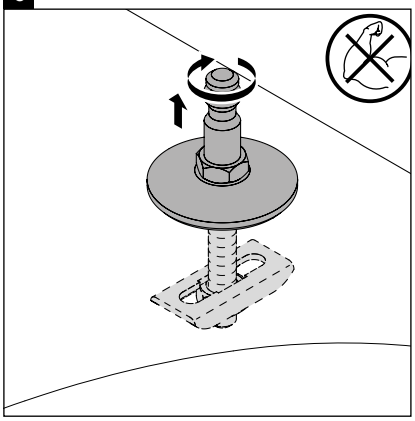

4

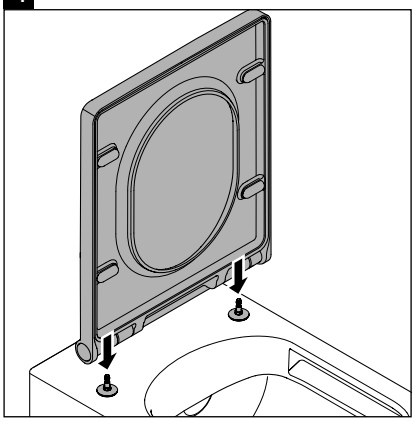

5

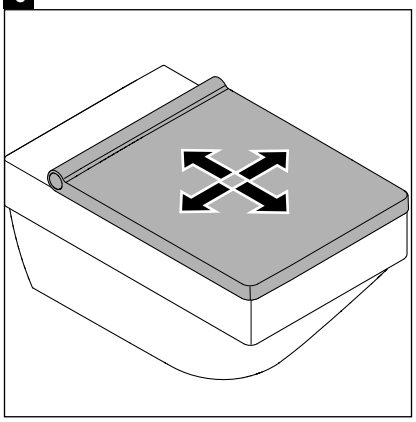

6

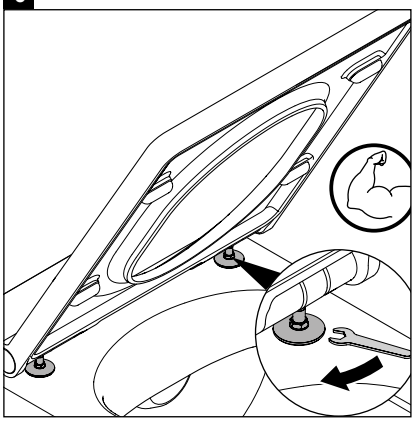

Best.-Nr. 57124/20.073 We reserve the right to make technical improvements and enhance the appearance of the products shown.

**DURAVIT AG**, Werderstr. 36, 78132 Hornberg, Germany, Phone +49 78 33 700, Fax +49 78 33 70 289, info@duravit.de, www.duravit.de