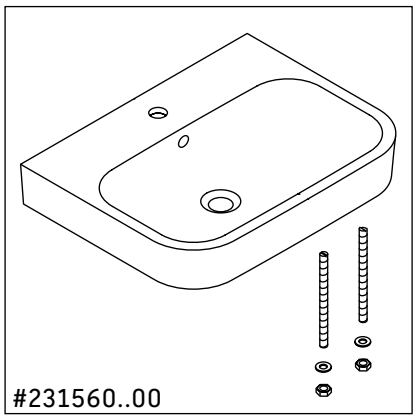
#231560..00

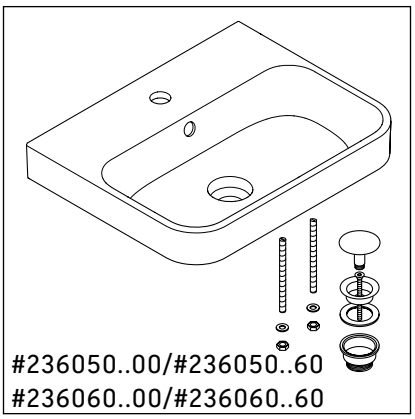
#236050..00/#236050..60
#236060..00/#236060..60

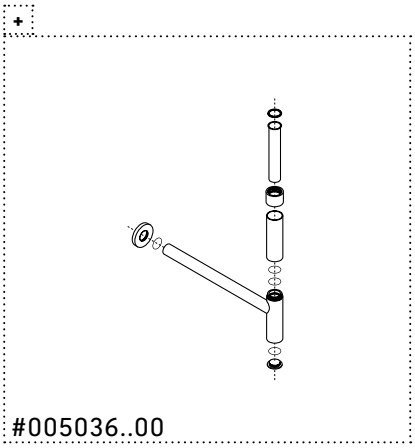
+
#005036..00

1

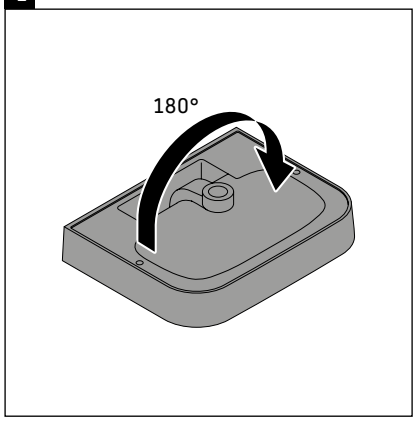
180°

2

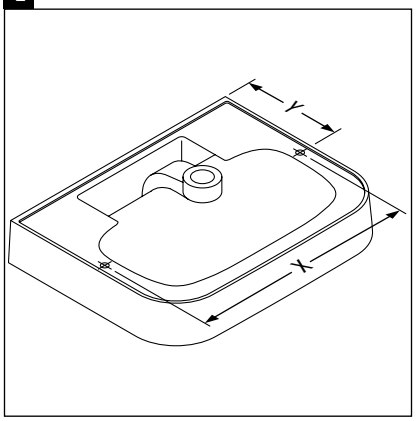
Y
X

3

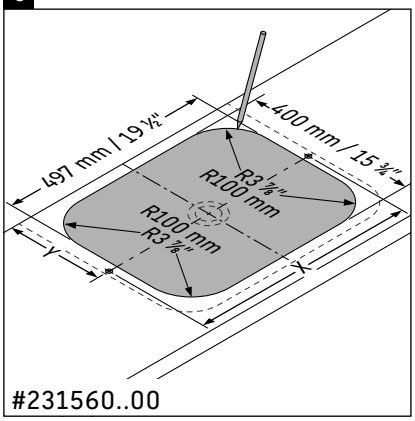
497 mm / 19 ½"
400 mm / 15 ¾"
R3 ⅞"
R100 mm
R100 mm
R3 ⅞"
Y
X
#231560..00

4

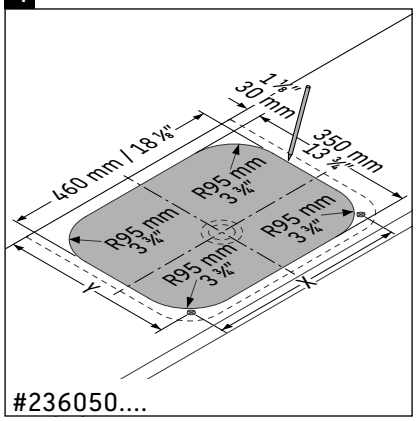
1 ⅛"
30 mm
460 mm / 18 ⅛"
350 mm
13 ¾"
R95 mm
3 ¾"
R95 mm
3 ¾"
R95 mm
3 ¾"
R95 mm
3 ¾"
Y
X
#236050....

5

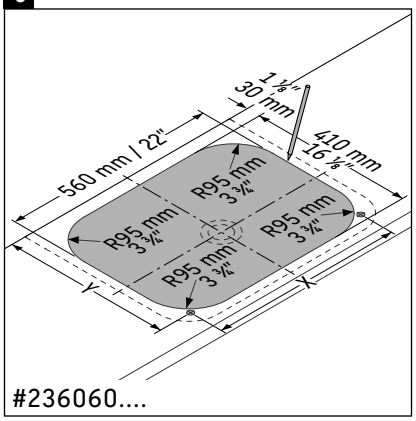
1 ⅛"
30 mm
560 mm / 22"
410 mm
16 ⅛"
R95 mm
3 ¾"
R95 mm
3 ¾"
R95 mm
3 ¾"
R95 mm
3 ¾"
Y
X
#236060....

6

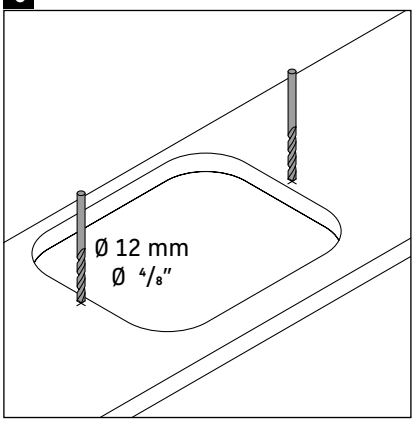
Ø 12 mm
Ø 4/8"

7

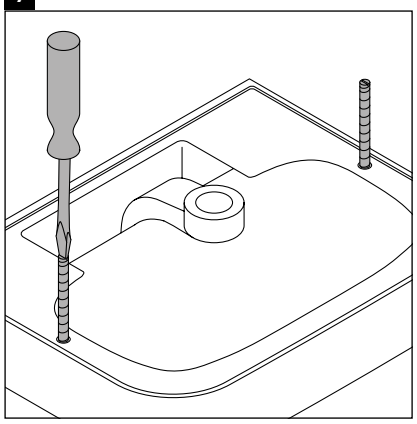

8

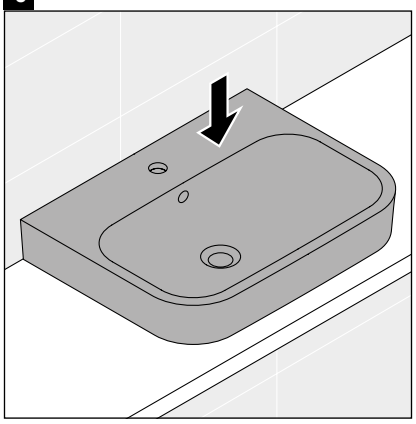

9

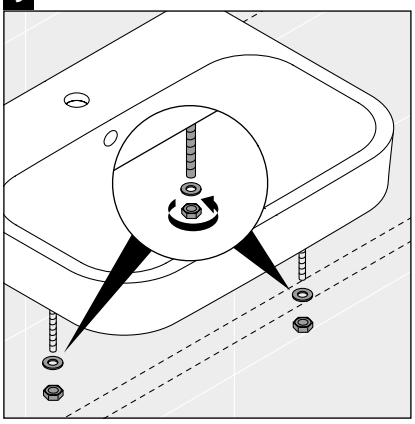

10

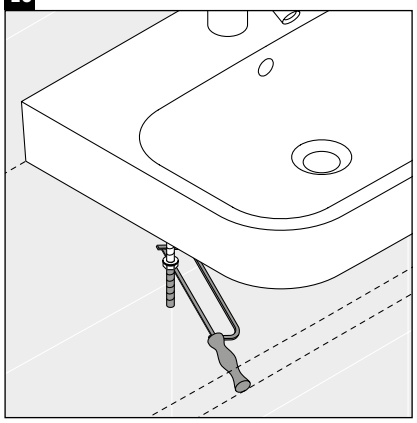

11

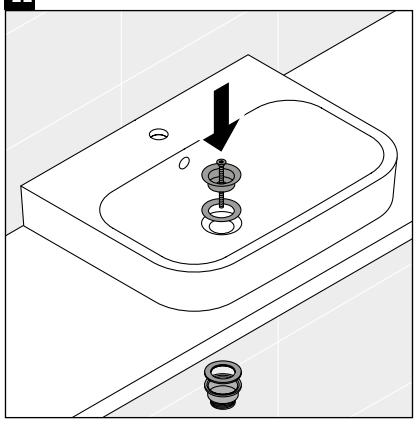

12

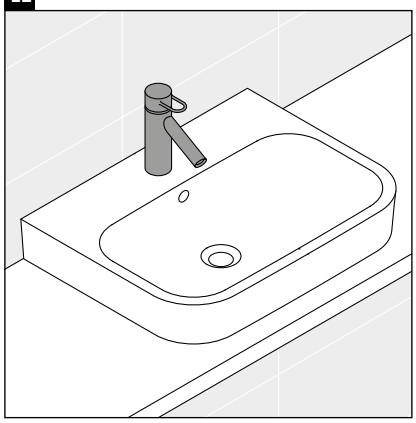

13

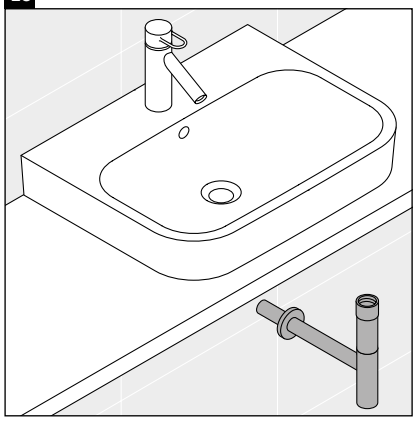

14

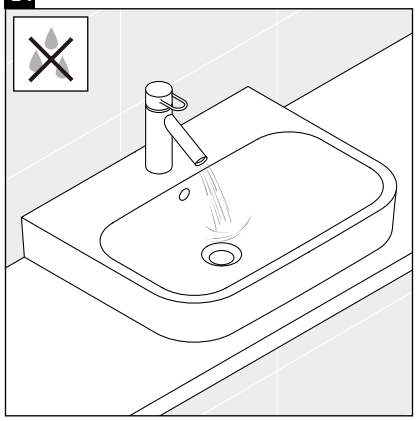

15

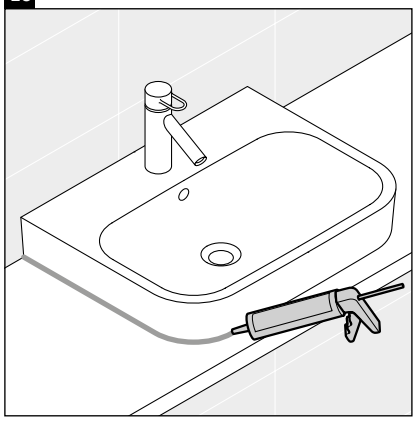

Best.-Nr. 57287/19.021 We reserve the right to make technical improvements and enhance the appearance of the products shown.

DURAVIT AG, Werderstr. 36, 78132 Hornberg, Germany, Phone +49 78 33 700, Fax +49 78 33 70 289, info@duravit.de, www.duravit.de