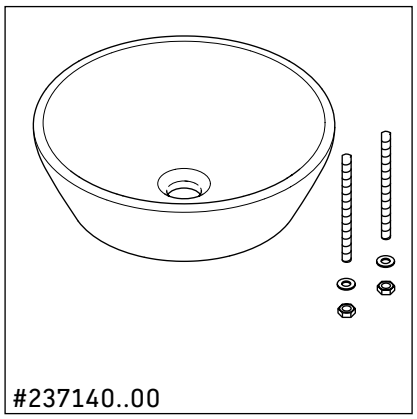
#237140..00

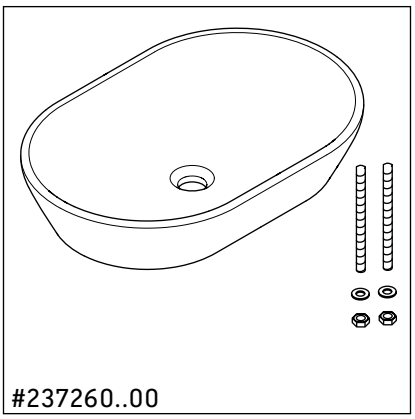
#237260..00

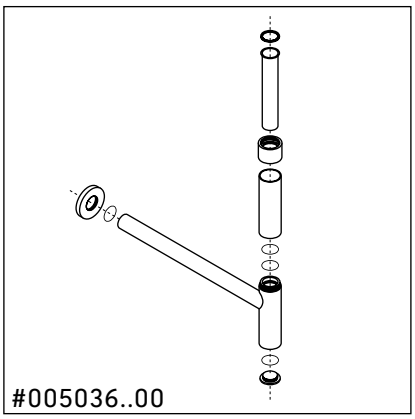
#005036..00

1

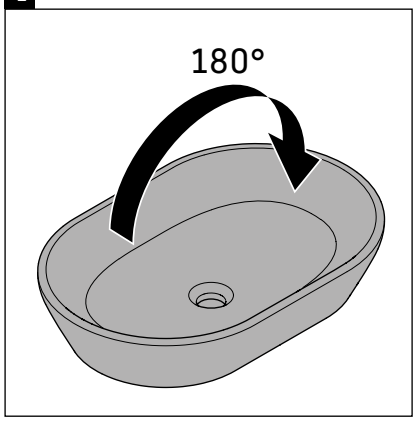
180°

2

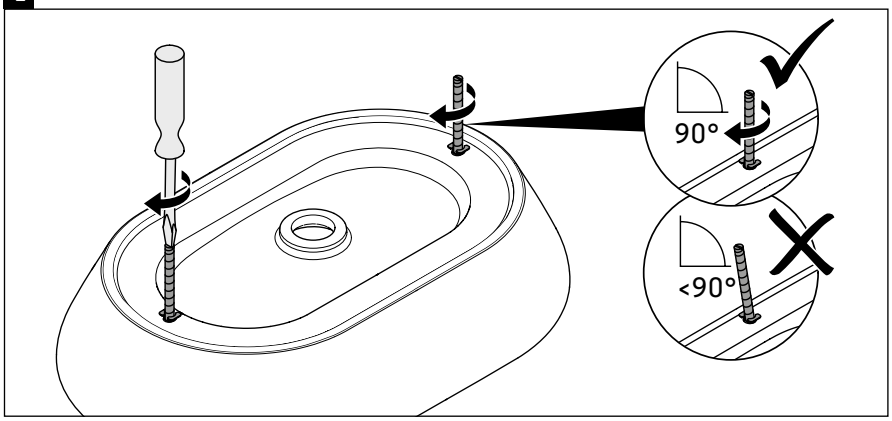
90°
<90°

3

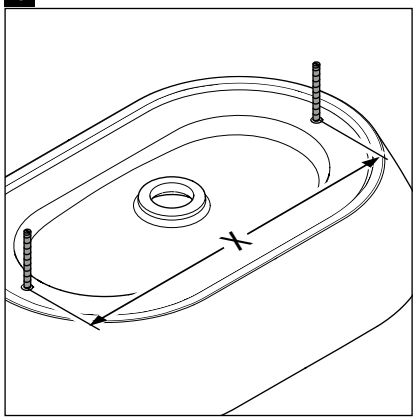
X

4

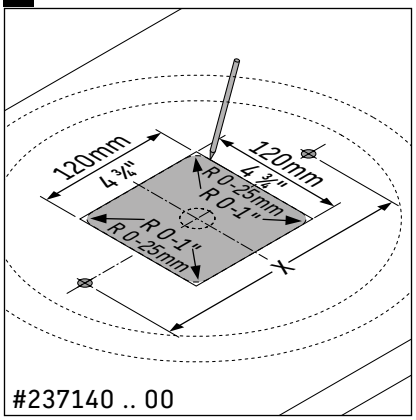
120mm
4 ¾"
120mm
4 ¾"
R 0-25mm
R 0-1"
R 0-1"
R 0-25mm
X
#237140 .. 00

5

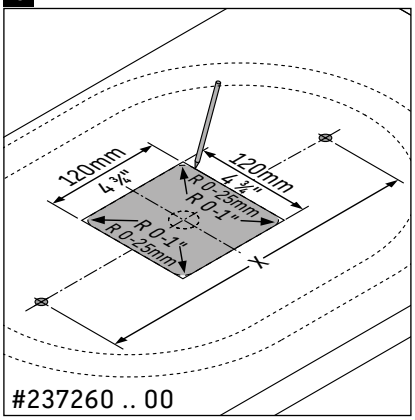
120mm
4 ¾"
120mm
4 ¾"
R 0-25mm
R 0-1"
R 0-1"
R 0-25mm
X
#237260 .. 00

6

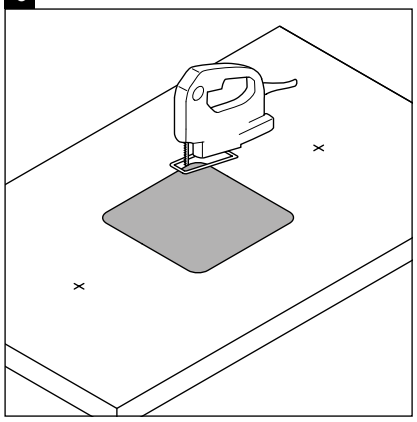

7

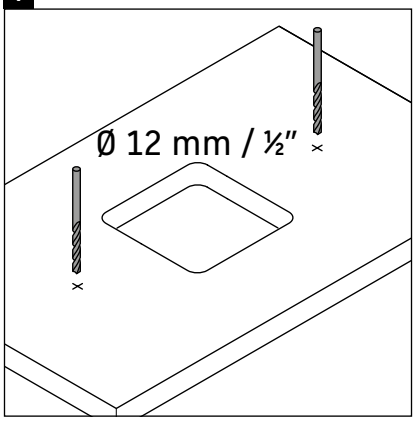
Ø 12 mm / ½"

8

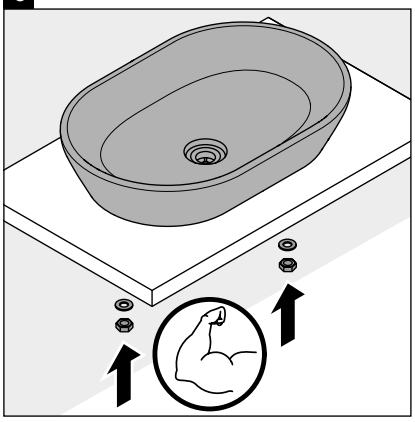

9

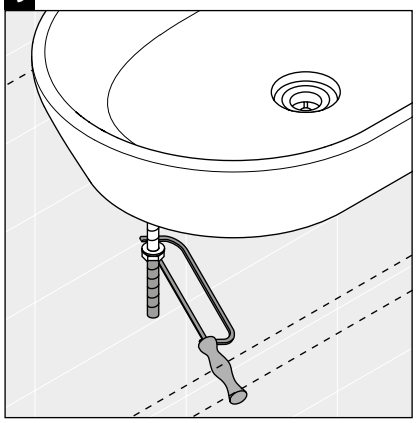

10

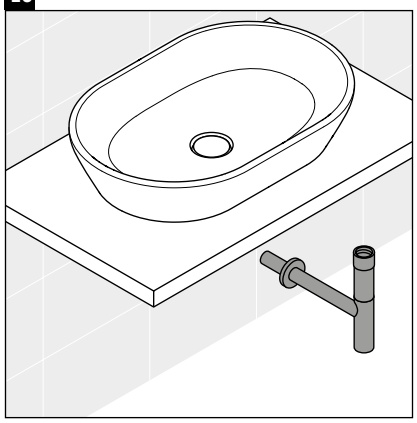

11

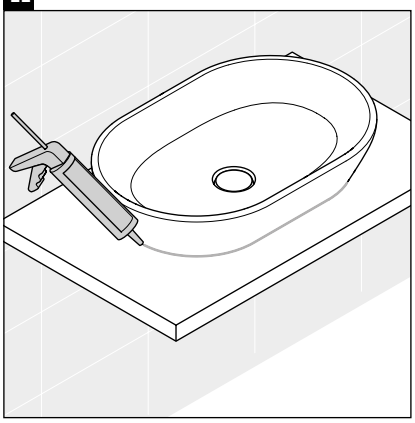

We reserve the right to make technical improvements and enhance the appearance of the products shown.

57414
Best.-Nr. 70300099/20.091

DURAVIT AG, Werderstr. 36, 78132 Hornberg, Germany, Phone +49 78 33 700, Fax +49 78 33 70 289, info@duravit.de, www.duravit.de