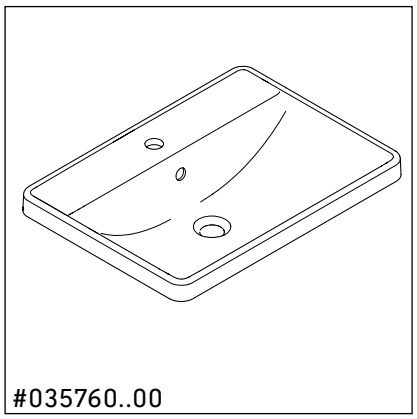

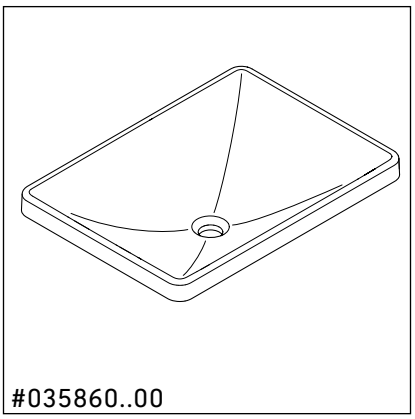

1

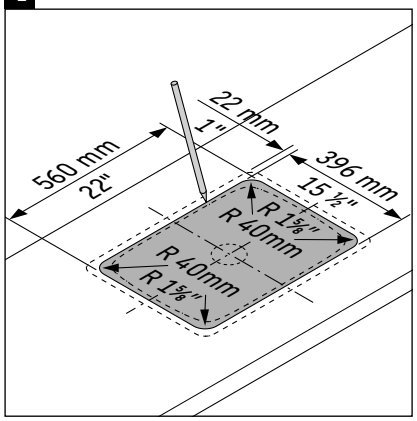

2

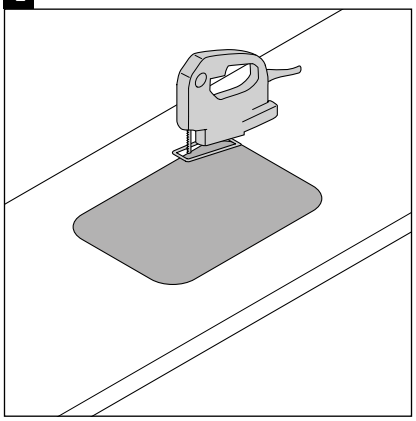

3 #035760..00

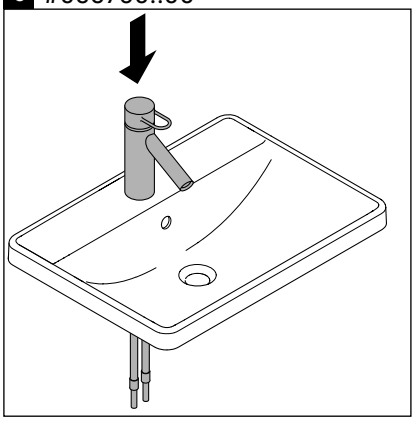

4

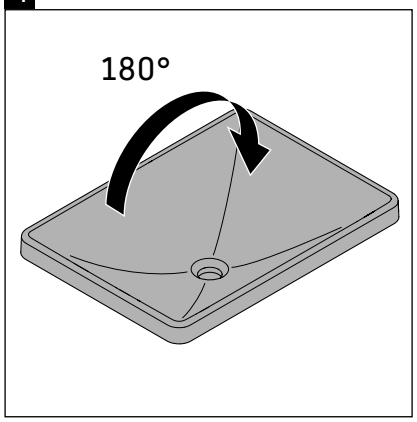

5

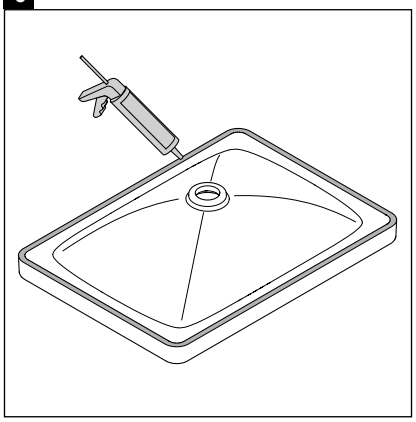

6

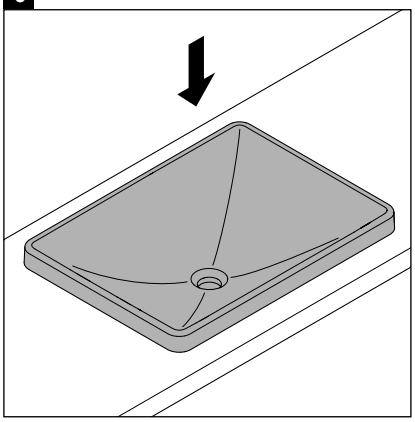

Kundennummer/57413
Best.-Nr. 70300098/21.01.2 We reserve the right to make technical improvements and enhance the appearance of the products shown.

DURAVIT AG, Werderstr. 36, 78132 Hornberg, Germany, Phone +49 78 33 700, Fax +49 78 33 70 289, info@duravit.de, www.duravit.de